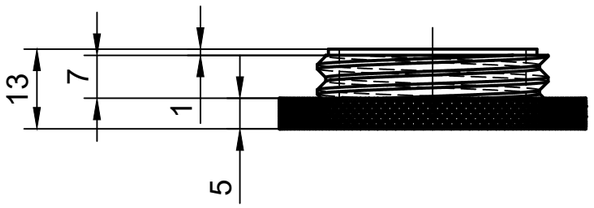


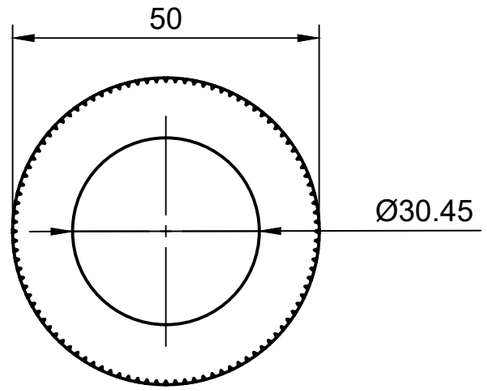


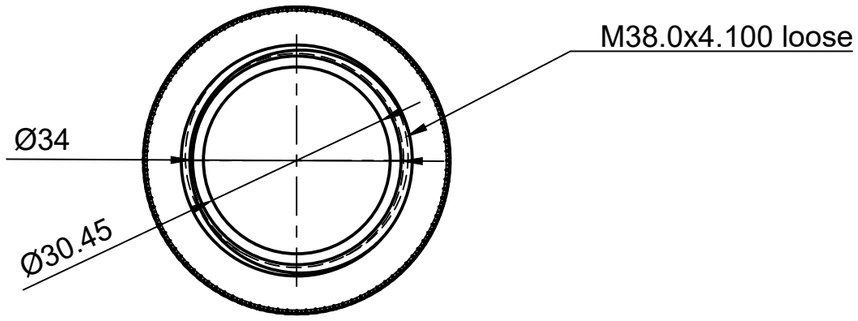


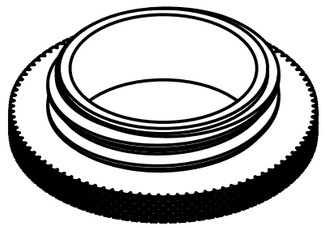

| Dept. | Technical reference | Created by | Approved by |
|---|---|---|---|
| Chemistry | | K. M. Day 3/4/2026 | C. J. Abelt 4/15/2026 |
| | | Document type: Technical Drawing | Document status: Final revision |
| | | Title: Sealing Nut | DWG No. |
| | | | Rev. 12 / Date of issue 4/17/2026 / Sheet 1/1 |